**SFP-OC12-IR-AO**

Juniper Networks® SFP-OC12-IR Compatible TAA Compliant OC-12-IR SFP Transceiver (SMF, 1310nm, 15km, LC)

**Features**

- INF-8074 and SFF-8472 Compliance
- Duplex LC Connector
- Commercial Temperature 0 to 70 Celsius
- Single-mode Fiber
- Hot Pluggable
- Excellent ESD Protection
- Metal with Lower EMI
- RoHS Compliant and Lead Free



**Applications**

- OC-12 Transmission
- Access and Enterprise

**Product Description**

This Juniper Networks® SFP-OC12-IR compatible SFP transceiver provides OC-12 (622mbs) transmission rates for up to 15km over single-mode fiber (SMF) using a wavelength of 1310nm via an LC connector. It is guaranteed to be 100% compatible with the equivalent Juniper Networks® transceiver. This easy to install, hot swappable transceiver has been programmed, uniquely serialized and data-traffic and application tested to ensure that it will initialize and perform identically. It is built to meet or exceed the specifications of Juniper Networks®, as well as to comply with MSA (Multi-Source Agreement) standards to ensure seamless network integration. This transceiver is Trade Agreements Act (TAA) compliant. We stand behind the quality of our products and proudly offer a limited lifetime warranty.

AddOn's transceivers are RoHS compliant and lead-free.

TAA refers to the Trade Agreements Act (19 U.S.C. & 2501-2581), which is intended to foster fair and open international trade. TAA requires that the U.S. Government may acquire only "U.S. – made or designated country end products."

TAA COMPLIANT

**Rev. 091621**

**Regulatory Compliance**

- ESD to the Electrical PINs: compatible with MIL-STD-883E Method 3015.4
- ESD to the LC Receptacle: compatible with IEC 61000-4-3
- EMI/EMC compatible with FCC Part 15 Subpart B Rules, EN55022:2010
- Laser Eye Safety compatible with FDA 21CFR, EN60950-1& EN (IEC) 60825-1,2
- RoHS compliant with EU RoHS 2.0 directive 2015/863/EU

**Absolute Maximum Ratings**

| Parameter | Symbol | Min. | Typ. | Max. | Unit |
|---|---|---|---|---|---|
| **Maximum Supply Voltage** | Vcc | -0.5 | | 3.6 | V |
| **Storage Temperature** | TS | -40 | | +85 | °C |
| **Operating Case Temperature** | Tc | 0 | | 70 | °C |
| **Operating Humidity** | RH | 5 | | 85 | % |
| **Receiver Power** | $R_{MAX}$ | | | -8 | dBm |
| **Data Rate** | | | 622 | | Mbps |

**Electrical Characteristics** (TOP=25°C, Vcc=3.3Volts)

| Parameter | Symbol | Min. | Typ. | Max. | Unit | Notes |
|---|---|---|---|---|---|---|
| **Power Supply Voltage** | Vcc | 3.15 | 3.30 | 3.45 | V | |
| **Power Supply Current** | Icc | | | 300 | mA | |
| **Power Consumption** | $P_{DISS}$ | | | 800 | mW | |
| **Transmitter** | | | | | | |
| **Single ended data input swing** | Vin,pp | 400 | | 2000 | mVpp | 1 |
| **Input differential impedance** | Zin | 85 | 100 | 115 | Ω | 2 |
| **Receiver** | | | | | | |
| **Single ended data output swing** | Vout, pp | 400 | | 2000 | mVpp | 1 |
| **Output differential impedance** | Zin | 80 | 100 | 120 | Ω | |

**Notes:**

1. AC coupled.
2. Rin > 100 kohms @ DC

**Optical Characteristics**

| Parameter | Symbol | Min. | Typ. | Max. | Unit | Notes |
|---|---|---|---|---|---|---|
| **9µm Core Diameter SMF** | L | | 10 | | km | |
| **Data Rate** | | | 622 | | Mbps | |
| **Transmitter** | | | | | | |
| **Average Output Power** | Pout | -15 | | -8 | dBm | 1 |
| **Optical Extinction Ratio** | ER | 10 | | | dB | |
| **Optical Wavelength** | Tλ | 1260 | 1310 | 1360 | nm | |
| **Spectral Width (RMS)** | Δλ | | | 4 | nm | |
| **Total Jitter** | TJ | | | 0.43 | UI | 2 |
| **Rise/Fall Time (20%~80%)** | tr/tf | | | 0.26 | ns | |
| **Receiver** | | | | | | |
| **Receiver Sensitivity** | Pmin | | | -28 | dBm | 3 |
| **Receiver Overload** | Pmax | -8 | | | dBm | |
| **Optical Center Wavelength** | λC | 1260 | | 1600 | nm | |

**Notes:**

1. Coupled into a Single-mode fibre
2. Filtered, measured with a PRBS $2^{23}$-1 test pattern @622Mbps.
3. Minimum average optical power is measured at BER less than 1E-12, with $2^{\wedge 23}$ -1 PRBS and ER=9 dB

**Pin Descriptions**

| Pin | Symbol | Name/Descriptions | Ref. |
|---|---|---|---|
| **1** | VeeT | Transmitter Ground (Common with Receiver Ground). | 1 |
| **2** | TX Fault | Transmitter Fault. LVTTL-O | 2 |
| **3** | TX Disable | Transmitter Disable. Laser output disabled on high or open. LVTT-I. | 3 |
| **4** | SDA | 2-Wire Serial Interface Data Line (Same as MOD-DEF2 in INF-8074i). LVTTL-I/O. | |
| **5** | SCL | 2-Wire Serial Interface Data Line (Same as MOD-DEF2 in INF-8074i). LVTTL-I. | |
| **6** | MOD_ABS | Module Absent, Connect to VeeT or VeeR in Module. | 4 |
| **7** | RS0 | Rate Select 0. Not used | 5 |
| **8** | LOS | Loss of Signal indication. Logic 0 indicates normal operation. LVTTL-O. | 2 |
| **9** | RS1 | Rate Select 1. Not used | 5 |
| **10** | VeeR | Receiver Ground (Common with Transmitter Ground). | 1 |
| **11** | VeeR | Receiver Ground (Common with Transmitter Ground). | 1 |
| **12** | RD- | Receiver Inverted DATA out. AC Coupled. CML-O. | |
| **13** | RD+ | Receiver Non-inverted DATA out. AC Coupled. CML-O. | |
| **14** | VeeR | Receiver Ground (Common with Transmitter Ground). | 1 |
| **15** | VccR | Receiver Power Supply. | |
| **16** | VccT | Transmitter Power Supply. | |
| **17** | VeeT | Transmitter Ground (Common with Receiver Ground). | 1 |
| **18** | TD+ | Transmitter Non-Inverted DATA in. AC Coupled. CML-I. | |
| **19** | TD- | Transmitter Inverted DATA in. AC Coupled. CML-O. | |
| **20** | VeeT | Transmitter Ground (Common with Receiver Ground). | 1 |

**Notes:**

1. The module signal ground contacts, VeeR and VeeT, should be isolated from the module case.
2. This contact is an open collector/drain output and should be pulled up to the Vcc_Host with resister in the range 4.7KΩ to 10KΩ. Pull ups can be connected to one or several power supplies, however the host board design shall ensure that no module contract has voltage exceeding module VccT/R +0.5.V.
3. Tx_Disable is an input contact with a 4.7KΩ to 10KΩ pull-up resistor to VccT inside module.
4. Mod_ABS is connected to VeeT or VeeR in the SFP+ module. The host may pull the contract up to Vcc_Host with a resistor in the range from 4.7KΩ to 10KΩ. Mod_ABS is asserted “High” when the SFP+ module is physically absent from a host slot.
5. Internally pulled down per SFF-8431

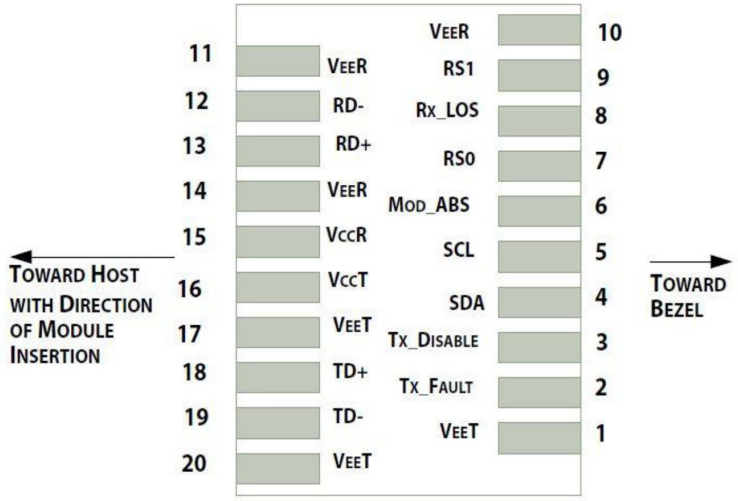


Pin-out of connector Block on Host board

**Recommended Circuit Schematic**

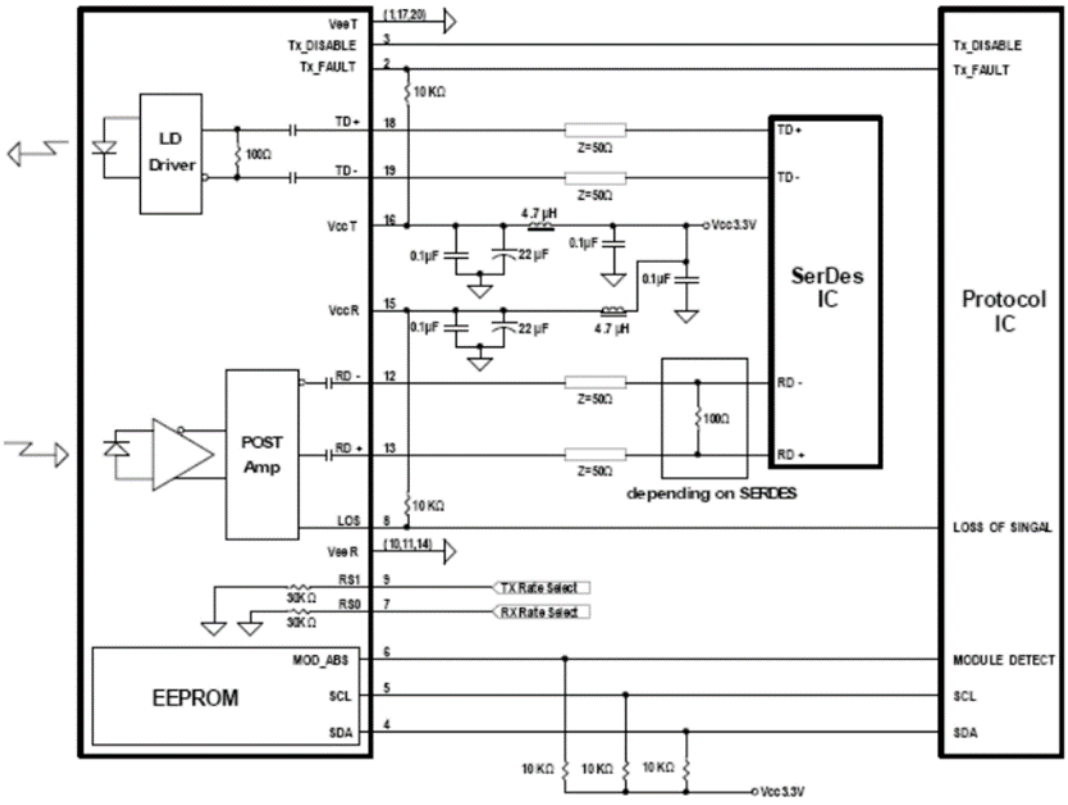

**Mechanical Specifications**

Small Form Factor Pluggable (SFP) transceivers are compatible with the dimensions defined by the SFP Multi-Sourcing Agreement (MSA).

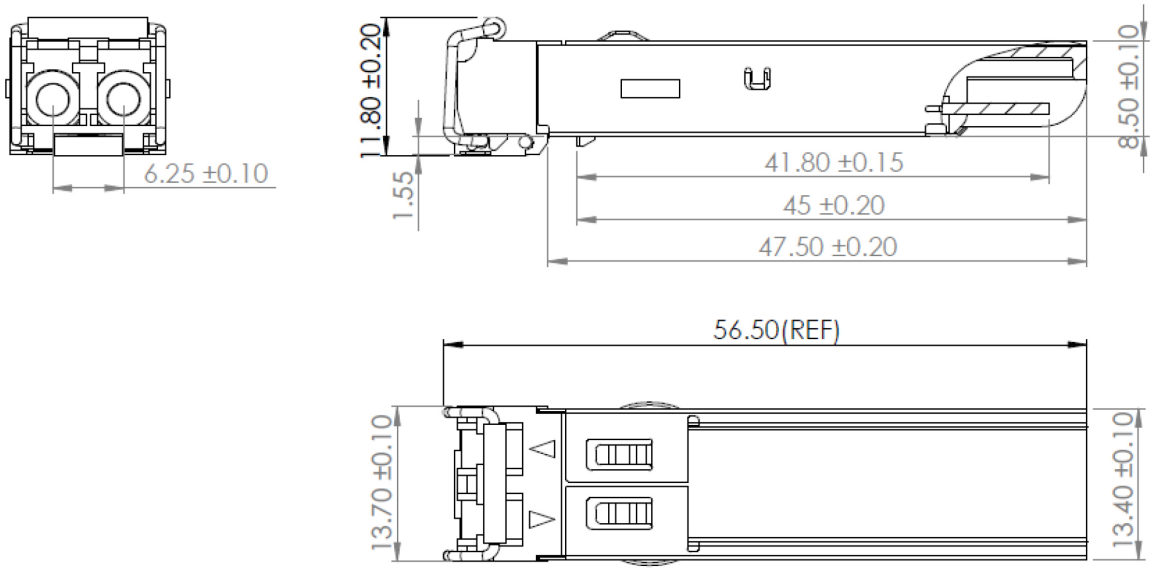


**EEPROM Information**

EEPROM memory map specific data field description is as below:

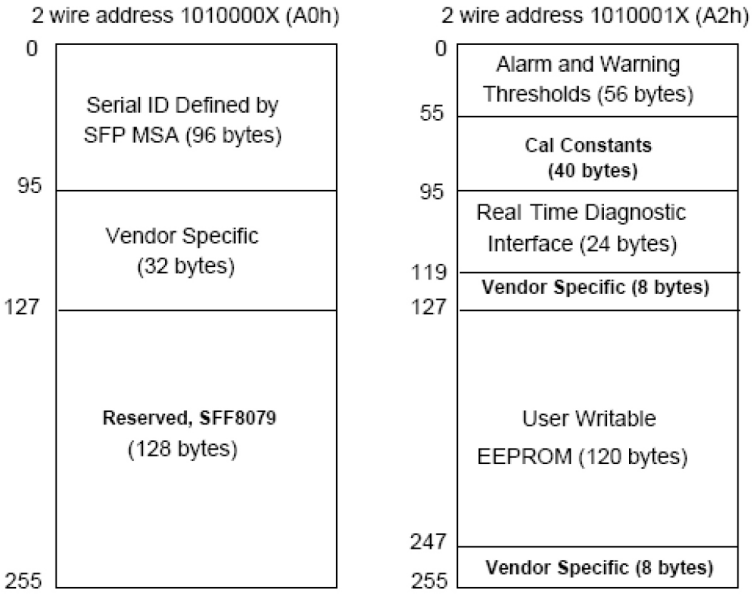

**About AddOn Networks**

In 1999, AddOn Networks entered the market with a single product. Our founders fulfilled a severe shortage for compatible, cost-effective optical transceivers that compete at the same performance levels as leading OEM manufacturers. Adhering to the idea of redefining service and product quality not previously had in the fiber optic networking industry, AddOn invested resources in solution design, production, fulfillment, and global support.

Combining one of the most extensive and stringent testing processes in the industry, an exceptional free tech support center, and a consistent roll-out of innovative technologies, AddOn has continually set industry standards of quality and reliability throughout its history.

Reliability is the cornerstone of any optical fiber network and is in engrained in AddOn's DNA. It has played a key role in nurturing the long-term relationships developed over the years with customers. AddOn remains committed to exceeding industry standards with certifications from ranging from NEBS Level 3 to ISO 9001:2005 with every new development while maintaining the signature reliability of its products.

**U.S. Headquarters**

Email: sales@addonnetworks.com

Telephone: +1 877.292.1701

Fax: 949.266.9273

**Europe Headquarters**

Email: salessupportemea@addonnetworks.com

Telephone: +44 1285 842070